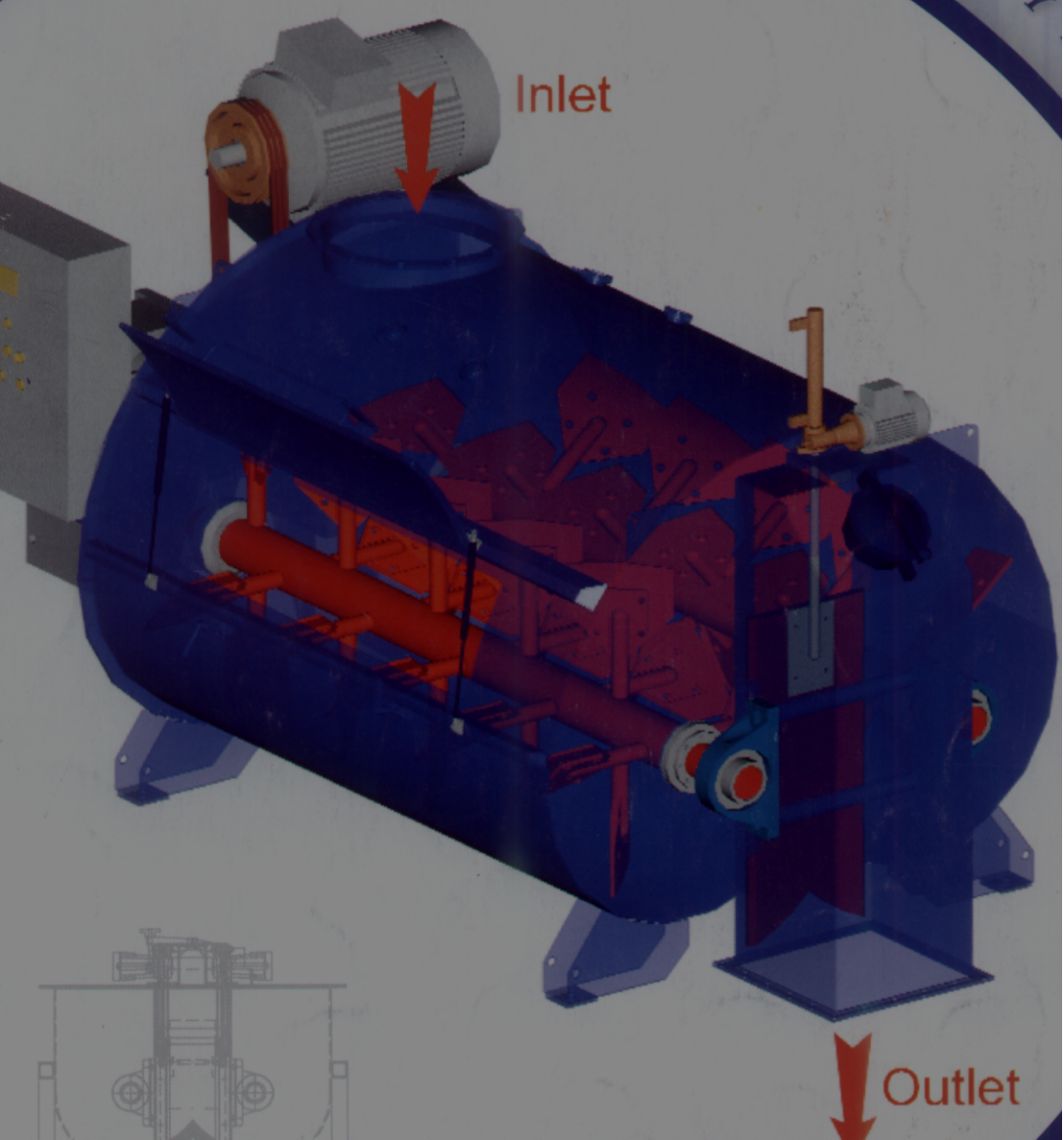
Inlet
Outlet